FP40 PUMP

Applications:

- Cutting, turning, milling, boring, grinding and similar applications of the machine tools,
- Cooling systems,
- Circulation systems. FP40 Pumps are used for pumping of cutting / cooling fluids.
- Pump has a peripheral impeller so it is recommended to use filtered fluid applications.

Fluid Specifications:

- Coolants,
- Cutting oils,
- Fluid temperature 0...80 °C
- Kinematic viscosity 1...90 mm^2/s

Materials:

Pump body	: Cast iron - DIN GG 25
Volute	: Cast iron - DIN GG 25
Impeller	: Brass
Pump shaft	: Engineering steel - AISI 1040 (DIN C35) Stainless steel- AISI 420(DIN X20Cr13) (Optional)
Electric motor	: 3 phase induction motor - 2 pole, Protection degree IP 55

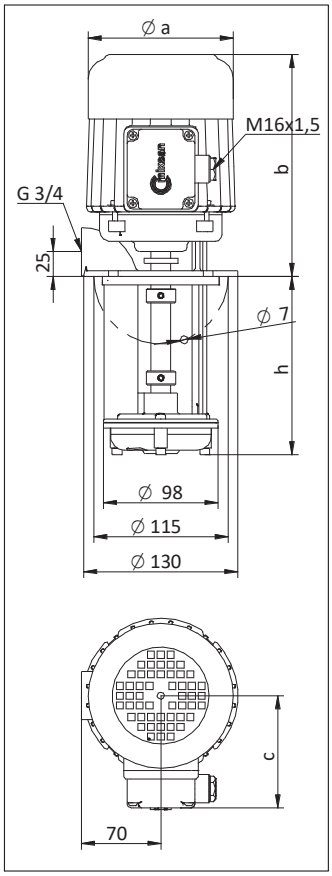

DIMENSIONS & NOMINAL VALUES

TYPE	Depth of immersion h (mm)	a (mm)	b (mm)	c (mm)	Weight kg	Power kW	Voltage V(Δ/Y)	Frequency Hz	Rated current A	Speed rpm
FP 40/15	150	123	190	95	7.8	0.40	230/400	50	2.43/1.4	2730
FP 40/20	200				8.0					
FP 40/25	250				8.5					
FP 40/30	300				8.6					
FP 42/13	130	138	240	111	11.4	1.1	230/400	50	4.85/2.8	2720
FP 42/17	170				11.6					
FP 42/22	220				11.8					
FP 42/27	270				12.0					
FP 43/15	155	176	330	139	20.5	1.5	230/400	50	5.72/3.3	2910
FP 43/19	195				20.7					
FP 43/24	245				20.9					
FP 43/29	295				21.1					

* M20x1,5 cable gland is used on FP 43 pumps.
** Pump dimensions according to EN 12157.
*** The performance curves are based on 1 mm^2/s (cSt) kinematic viscosity values and 997 kg/m^3 density
**** Curve tolerance according to ISO 9906:2012 Grade 3B.
***** FP 42 pump has IE2 motor. According to IEC 60034-30-1:2014 standard this pump is excluded from efficiency class since its motor is completely integrated into the pump.

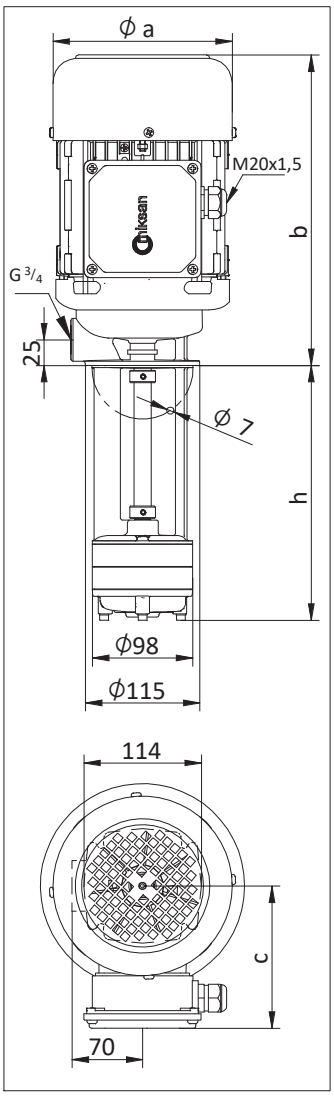

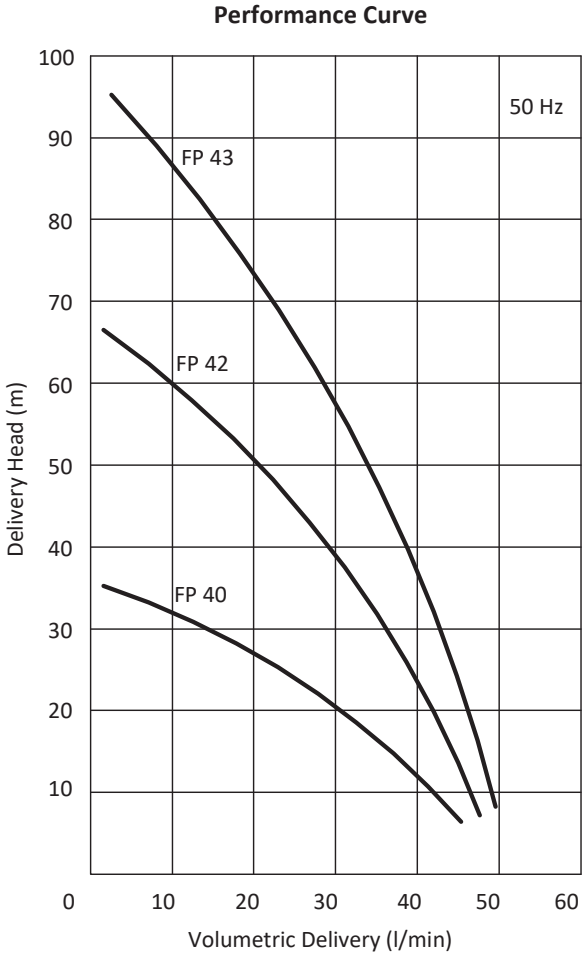

FP90 PUMP

Applications:

- Cutting, turning, milling, boring, grinding and similar applications of the machine tools,
- Cooling systems,
- Circulation systems. FP90 Pumps are used for pumping of cutting / cooling fluids.
- Pump has a peripheral impeller so it is recommended to use filtered fluid applications.

Fluid Specifications:

- Coolants,
- Cutting oils,
- Fluid temperature 0...80 °C
- Kinematic viscosity 1...90 mm^2/s

Materials:

Pump body	: Cast iron - DIN GG 25
Volute	: Cast iron - DIN GG 25
Impeller	: Brass
Pump shaft	: Engineering steel - AISI 1040 (DIN C35) Stainless steel- AISI 420(DIN X20Cr13) (Optional)
Electric motor	: 3 phase induction motor - 2 pole, Protection degree IP 55

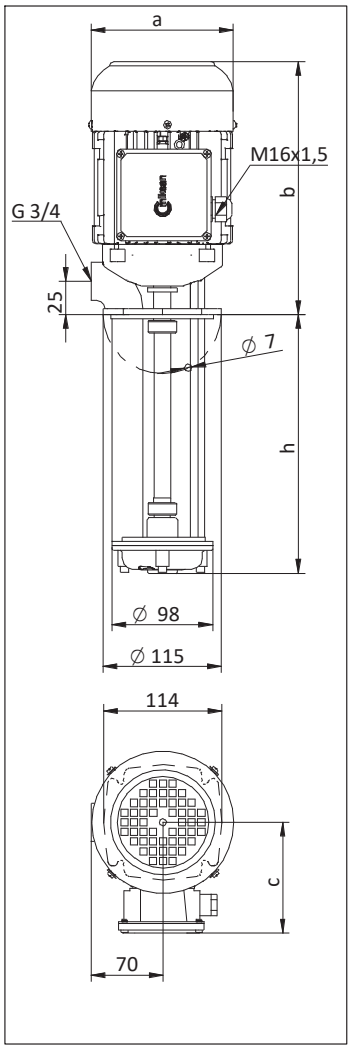

DIMENSIONS & NOMINAL VALUES

TYPE	Depth of immersion h (mm)	a	b	c	Weight kg	Power kW	Voltage V(Δ/Y)	Frequency Hz	Rated current A	Speed rpm
		mm								
FP 90/11	110	138	240	111	10.6	1.1	230/400	50	4.85/2.8	2720
FP 90/15	150				10.9					
FP 90/20	200				11.2					
FP 90/25	250				11.5					
FP 90/30	300				11.8					

* Pump dimensions according to EN 12157.
** The performance curves are based on 1 mm^2/s (cSt) kinematic viscosity values and 997 kg/m^3 density
*** Curve tolerance according to ISO 9906:2012 Grade 3B.
**** FP 90 pump has IE2 motor. According to IEC 60034-30-1:2014 standard this pump is excluded from efficiency class since its motor is completely integrated into the pump.
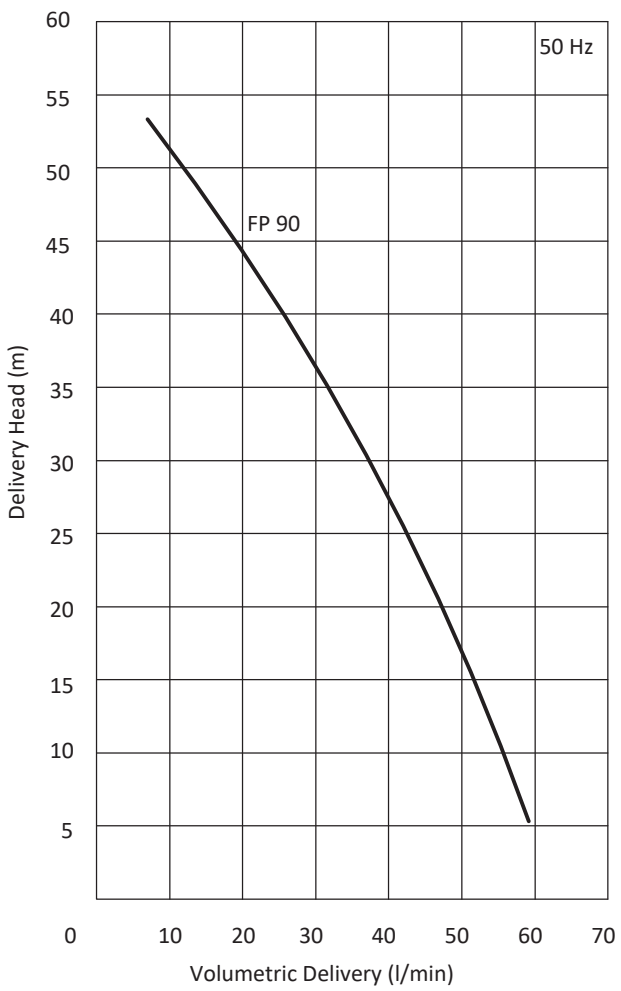
Performance Curve