KEP 232 PUMP

Applications:

- Cutting, turning, milling, boring, grinding and similar applications of the machine tools,
- Filtration systems,
- Circulation systems.
- KEP Pumps are used for pumping of cutting / cooling fluids.

Fluid Specifications:

- Coolants,
- Cutting oils,
- Grinding oils,
- Water
- Chip containing liquids (max. 9 mm)
- Fluid temperature 0...60 °C
- Kinematic viscosity 1...30 mm^2/s

Materials:

Pump body	: Cast iron - DIN GG25
Motor Flange	: Cast iron - DIN GG25
Impeller	: Cast iron - DIN GG25
Shaft	: Stainless steel - AISI 420 (DIN 1.4021)
Mechanical Seal	: C-SiC-Viton
Electric motor	: 3 phase induction motor - 2 pole, Optionally 4-pole, Protection degree IP 54

Suction Head and Priming Time

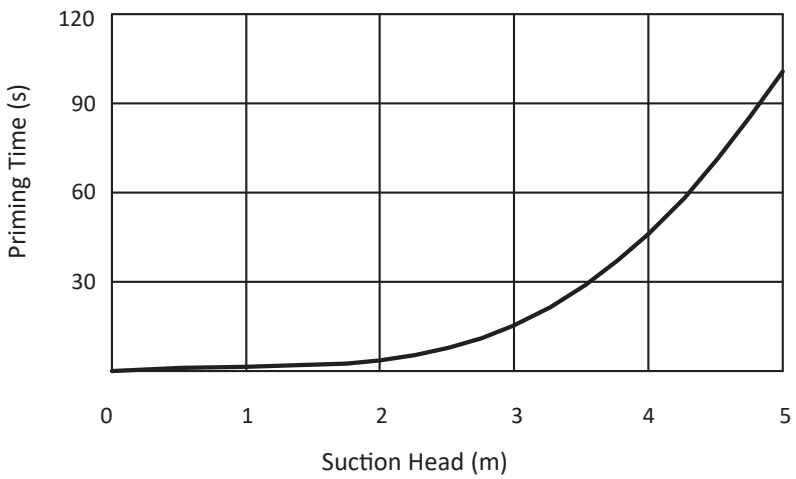

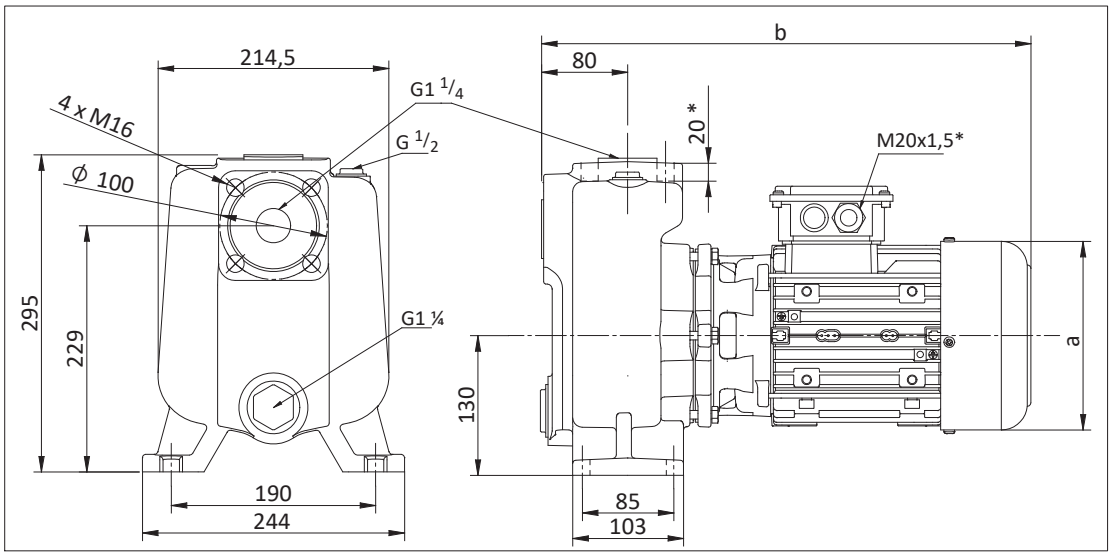

DIMENSIONS & NOMINAL VALUES

TYPE	a (mm)	b (mm)	Weight kg	Power kW	Voltage V(Δ/Y)	Frequency Hz	Rated current A	Speed rpm
KEP 232/135-4	157	411	30.5	0.55	230/400	50	2.96/1.71	1410
KEP 232/110			31.5	1.1			4.16/2.4	2890
KEP 232/120	176	430	35.5	1.5			5.72/3.3	2910
KEP 232/128		455	38.0	2.2			7.79/4.5	2905
KEP 232/135	194	485	45.0	3.0			10.39/6.0	2905

* Flange connection (DIN EN 1092-2 PN 16)
** The performance curves are based on 1 mm^2/s (cSt) kinematic viscosity values and 997 kg/m^3 density
*** Curve tolerance according to ISO 9906:2012 Grade 3B.
**** M16x1,5 cable gland is used on KEP 232/135-4 AND KEP 232/110 pumps.

Performance Curve